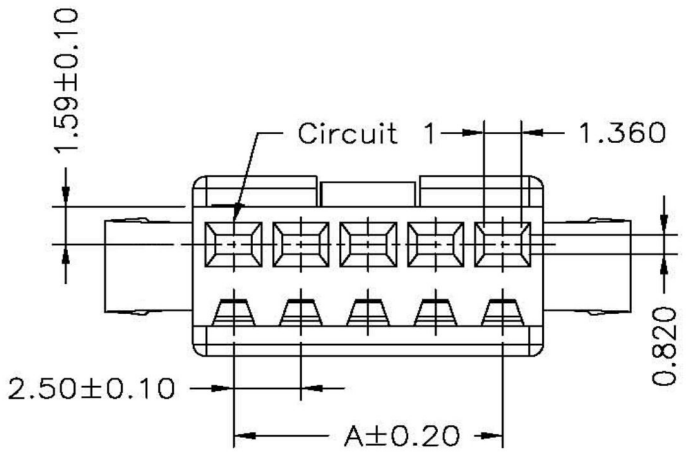

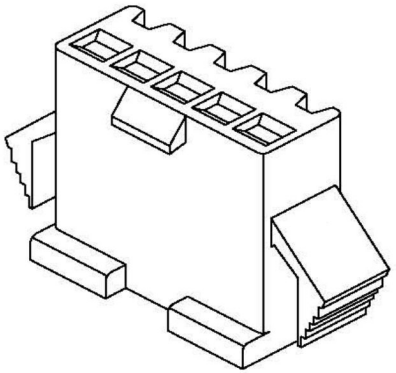

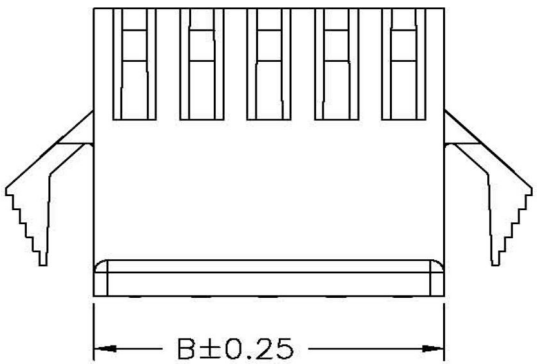

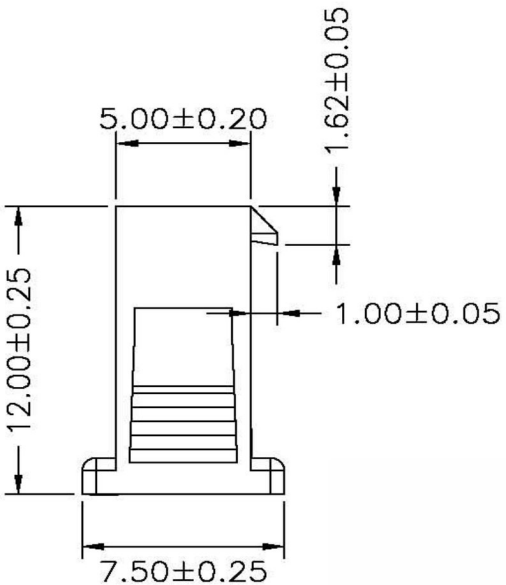

SPECIFICATIONS
Current Rating: 3A AC,DC
Voltage Rating: 250V AC,DC
Temperature Range: −25°C ~ +85°C
Contact Resistance: 10mΩ Max
Insulation Resistance: 500MΩ Min
Withstanding Voltage: 1500V AC/minute
Material: Nylon 66,UL94V−0
Color: Black

Ordering Information & Dimensions

PIN NO.	Dimensions	
	A	B
02P	2.50	5.50
03P	5.00	8.00
04P	7.50	10.50
05P	10.00	13.00
06P	12.50	15.50
07P	15.00	18.00
08P	17.50	20.50
09P	20.00	23.00
10P	22.50	25.50
11P	25.00	28.00
12P	27.50	30.50

RoHS Compliant

HSM 玄茂科技股份有限公司
HSUAN MAO TECHNOLOGY CO., LTD.

APPD. 核准 Angel		TOLERANCE 容許公差 X. X±0. 25 X. XX±0. 15 X. XXX±0. 05	PART NAME 品名 2.5mm MALE HOUSING 1XXXP W/EAR BLACK COLOR ROHS LOW-LEAD
DWG. 製圖 Yumi	SCALE 比例 參考		
	UNIT 單位 MM	SIZE. 紙張尺寸 A4	PART NO. 料號 H2320-XXPB0000R
DATE 制表日 2010/03/01	PAGE 張數 1 OF 1	REV. 版次 A	