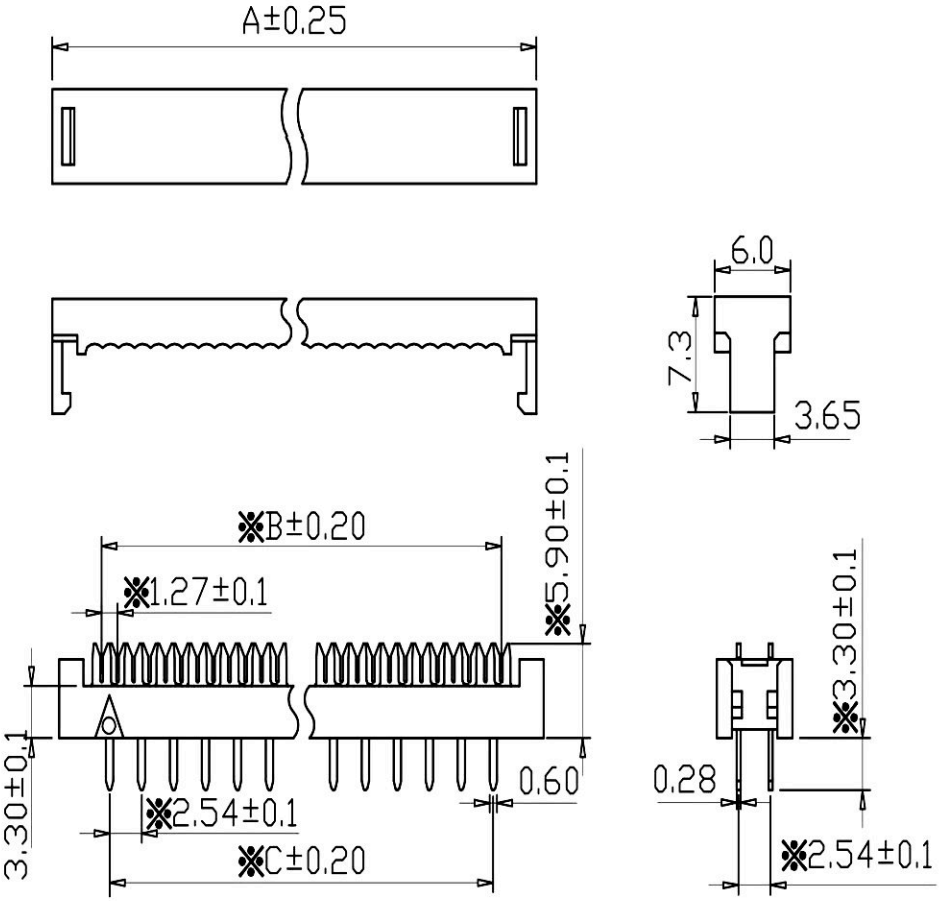

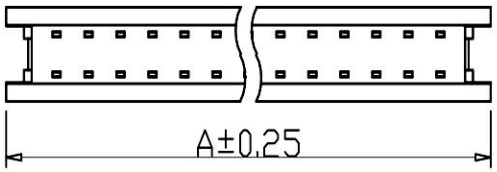

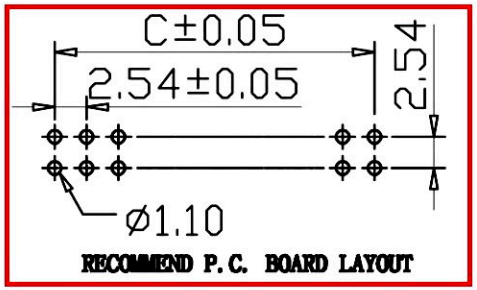

Material:
Insulator: PBT+25% Glass Fiber (UL94V-0).
Contact: Copper Alloy.
Contact Plated: Gold or Tin over Nickel Plated.

Specification:
Current Rating: 1 Amp.
Withstanding Voltage: AC 500V for 1 Minute.
Insulation Resistance: 1000MΩ Min. at DC 500V.
Contact Resistance: 15mΩ Max..
Operating Temperature: -40℃ ~ +105℃.

Pos.	Dim. A	Dim. B	Dim. C
6	13.07	6.35	5.08
8	15.61	8.89	7.62
10	18.15	11.43	10.16
12	20.69	13.97	12.70
14	23.23	16.51	15.24
16	25.77	19.05	17.78
18	28.31	21.59	20.32
20	30.85	24.13	22.86
24	35.93	29.21	27.94

Pos.	Dim. A	Dim. B	Dim. C
26	38.47	31.75	30.48
28	41.01	34.29	33.02
30	43.55	36.83	35.56
34	48.63	41.91	40.64
36	51.17	44.45	43.18
40	56.25	49.53	48.26
50	68.95	62.23	60.96
60	81.65	74.93	73.66
64	86.73	80.01	78.74

C	3100	—	10	A	B	S	B	0	0	R
1	2		3	4	5	6	7	8	9	10

1. PRODUCTS:
   C:Connector
2. SERIES NO.:
   3100
3. CONTACT NO.:
   08-64
4. BODY OPTION:
   A:7.0mm
   (After Assembly)
5. CONTACT TERMINAL:
   B:W/O Kink
6. CONTACT PLATING:
   S:Selective Gold
7. INSULATOR COLOR:
   B:Black
8. FILL IT WITH"0"
9. FILL IT WITH"0"
10. R:ROHS

RoHS Compliant

HSM 玄茂科技股份有限公司
HSUAN MAO TECHNOLOGY CO., LTD.

APPD. 核准 HELEN		TOLERANCE 容許公差 .0 ± 0.2, .00 ± 0.1, ANG. ± 3°	PART NAME 品名: DIP PLUG 2.54mm X 2.54mm XXP SELECTIVE GOLD PLATING BLACK INSULATOR ROHS
DWG. 製圖 ABBY	SCALE 比例 參考		
DATE 制表日 2020/08/18	UNIT 單位 MM	SIZE. 紙張尺寸 A4	
	PAGE 張數 1 OF 1	REV. 版次 B	PART NO. 料號 C3100-XXABSB00R